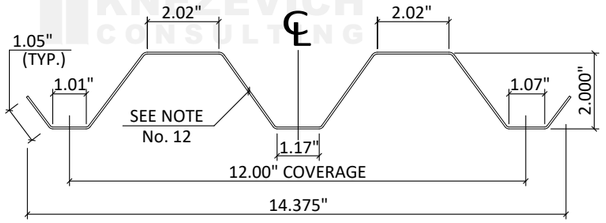

1 STORM PANEL
SCALE : 3" = 1'-0"

LIMIT ONE HALF PANEL PER OPENING

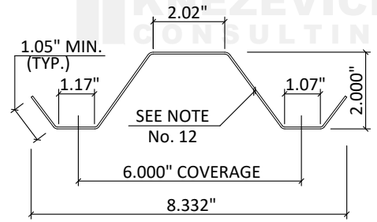

1a HALF STORM PANEL
SCALE : 3" = 1'-0"

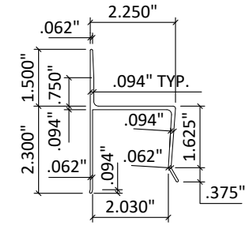

2 "h" HEADER
SCALE : 3" = 1'-0"

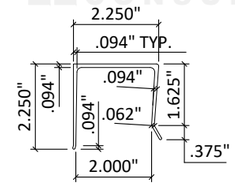

3 "U" HEADER
SCALE : 3" = 1'-0"

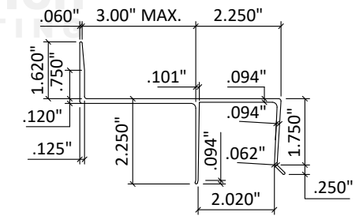

3a BUILD-OUT "U" HEADER
SCALE : 3" = 1'-0"

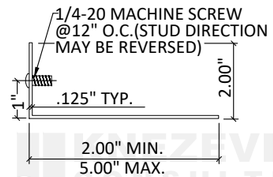

4 STUD ANGLE
SCALE : 3" = 1'-0"

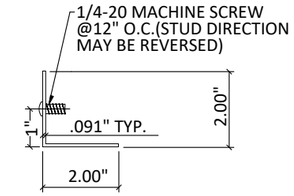

4a STUD ANGLE
SCALE : 3" = 1'-0"

4b STUD ANGLE
SCALE : 3" = 1'-0"

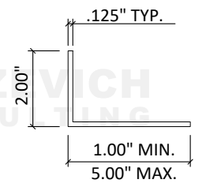

5 ANGLE
SCALE : 3" = 1'-0"

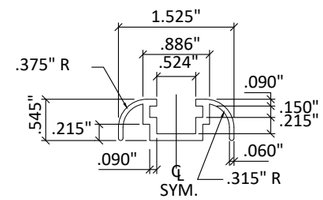

6 C-TRACK (FINISH)
SCALE : HALF SIZE

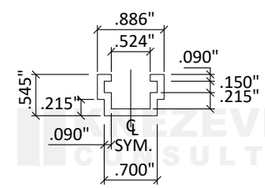

6a C-TRACK
SCALE : HALF SIZE

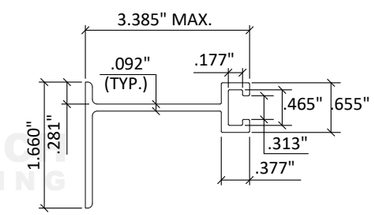

7 BUILD-OUT F-TRACK
SCALE : HALF SIZE

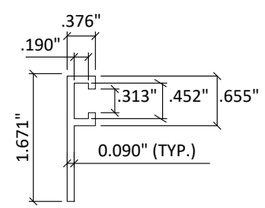

8 "F" TRACK
SCALE : HALF SIZE

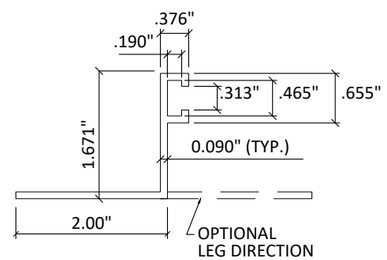

8a "F" ANGLE - TRACK
SCALE : HALF SIZE

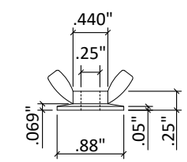

(ZAMAC 3 ALLOY)
9 WING NUT
SCALE : HALF SIZE

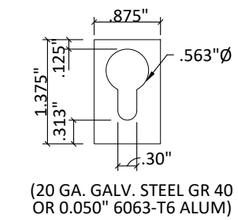

(20 GA. GALV. STEEL GR 40
OR 0.050" 6063-T6 ALUM)

10 KEYHOLE WASHER
SCALE : HALF SIZE

GENERAL NOTES:

1. This Product Evaluation Document (PED) represents a shutter system analyzed and tested in accordance with the Florida Building Code, Building 9th Edition (2026) for use within and outside of the High Velocity Hurricane Zone (HVHZ).
2. Product performance testing was conducted in accordance with TAS 201, TAS 202, TAS 203, & the system is Large Missile Impact Resistant.
3. Determine the Positive and Negative design loads to use when referencing these documents in accordance with ASCE 7-22 utilizing Allowable Stress Design (ASD) Load Factors. Calculated wind loads shall be multiplied by the ASD load factor 0.6 before referencing these documents.
4. For wind load calculations in accordance with ASCE 7-22, a directionality factor of kd = 0.85 may be used.
5. No allowable stress increase is utilized in the design of this system; however, a wind load duration factor of Cd = 1.6 is used for screws designed per NDS.
6. This PED is generic and does not include information prepared for application of this system to a specific site.
7. This PED is the installation instructions portion of a Product Evaluation and shall only be used with the corresponding Product Evaluation Report.
8. This PED is suitable to be applied by the Contractor provided the Contractor does not deviate from the conditions detailed herein and the Contractor verifies that the existing structure does not deviate in either form or material from the structural substrates detailed herein.
9. Any modifications or additions to this PED will void the evaluation documents.
10. When site conditions deviate from the PED, the Building Official may require that site specific documents justifying the deviation be prepared, signed, dated and sealed by a licensed engineer or registered architect.
11. Each panel of the assembly shall be permanently labeled at a spacing no greater than 36" on the exterior face with the following minimum information:
    ABC Supply Outdoor Solutions
    Fort Lauderdale, FL
    TAS 201, 202, & 203
    9 lb Large Missile
    FBC Approval Number
12. Aluminum storm panels shall be 3004-H34 or 5052-H34 aluminum alloy with a minimum thickness as specified in the applicable span tables.
13. All extrusions shown shall be 6063-T6 aluminum alloy, u.o.n. with a minimum Fy = 25 ksi.
14. All bolts, studs, and washers, excluding installation fasteners, shall be stainless steel with a minimum tensile strength of 60 ksi, u.o.n.
15. Installation fasteners shall comply with FBC Section 1711.1.
16. Top and bottom details may be interchanged as field conditions require. Panels may be mounted horizontally where applicable. h & U headers may not be used for horizontal mounting conditions.
17. Tracks may be removable provided removable anchors are used.
18. If panel overlaps opening by 1.5 times the gap between the wall and panel, no side closures are required.
19. Provide sealant around perimeter of components in contact with structure to prevent water intrusion behind components.

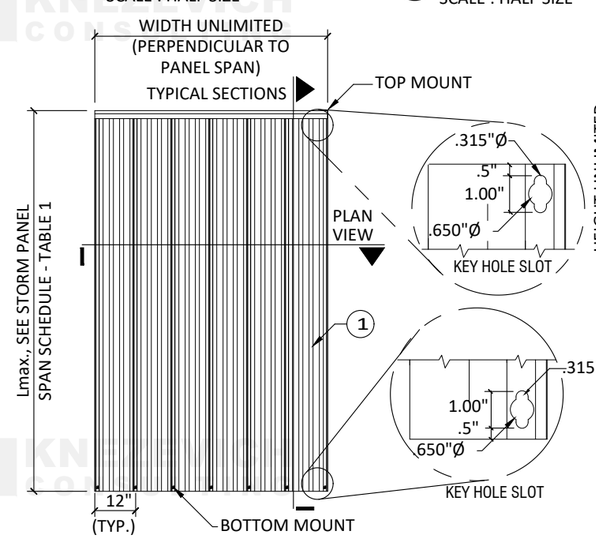

TYPICAL VERTICAL ELEVATION
SCALE: 1/4" = 1' - 0"

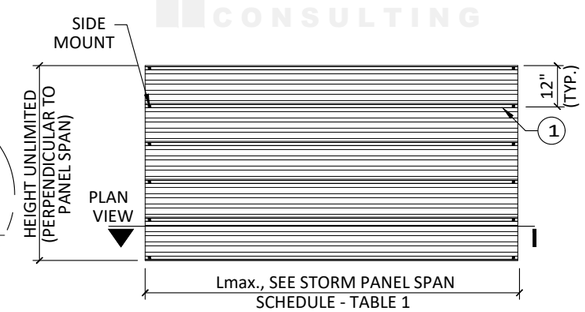

TYPICAL HORIZONTAL ELEVATION
SCALE: 1/4" = 1' - 0"

eyewall Armor™
HURRICANE PROTECTION

J.W. KNEZEVICH
LICENSE
NO. 41961
STATE OF
FLORIDA
PROFESSIONAL ENGINEER

07/30/2026

KNEZEVICH CONSULTING
KNEZEVICH CONSULTING, LLC
1600 S. Federal Hwy., Suite 961
Pompano Beach, FL 33062
T 954.772.6224 COA 27988
www.knezevich.com

Copyright © 2026 Knezevich Consulting, LLC

.050 & .0615 ALUMINUM STORM PANEL

Client / Manufacturer:
A DIVISION OF ABC SUPPLY CO., INC.
400 West McNab Road
Fort Lauderdale, FL 33309
phone: 954-970-9999
fax: 954-970-9988
ABC Supply / Outdoor Solutions™

Revisions

no	date	by	description
0	07/30/2026	JWK	FBC 2026 Update; formerly KC23-0710

Scale: AS NOTED
Drawn by: JWK
Date: 07/30/26

J.W. Knezevich
Professional Engineer
FL License No.: PE 41961

This item has been digitally signed and sealed by John W. Knezevich, PE on the date adjacent to the seal.
Digitally signed by John W. Knezevich
Signature must be verified on any electronic copies.

Drawing No.
KC26-0713
sheet 1 of 8

TABLE 1: PANEL SPAN SCHEDULES					
0.050 ALUMINUM PANELS			0.0615 ALUMINUM PANELS		
POSITIVE OR NEGATIVE ASD WINDLOAD 'W' (PSF)	L max. FOR POSITIVE ASD WINDLOAD	L max. FOR NEGATIVE ASD WINDLOAD	POSITIVE OR NEGATIVE ASD WINDLOAD 'W' (PSF)	L max. FOR POSITIVE ASD WINDLOAD	L max. FOR NEGATIVE ASD WINDLOAD
23	144"	144"	27.5	144"	144"
25	141"	144"	30	143"	144"
30	135"	144"	35	138"	144"
35	130"	144"	40	133"	144"
40	126"	143"	45	129"	144"
45	122"	135"	50	126"	139"
50	119"	128"	55	123"	132"
55	116"	122"	60	120"	127"
60	111"	117"	65	118"	122"
65	107"	112"	70	116"	117"
70	103"	108"	75	113"	113"
75	96"	104"	80	109"	109"
80	90"	99"	85	106"	106"
85	84"	93"	90	102"	102"
90	80"	88"	95	96"	96"
95	75"	83"	100	91"	91"
100	72"	79"	110	83"	83"
110	65"	72"	120	76"	76"
120	60"	66"	130	N.A.	70"
130	N.A.	61"	140	N.A.	65"
140	N.A.	56"	150	N.A.	61"
150	N.A.	52"			

TABLE 2: MINIMUM SEPARATION FROM GLASS SCHEDULES							
0.050 ALUMINUM PANELS				0.0615 ALUMINUM PANELS			
POSITIVE ASD WINDLOAD 'W' (PSF)	SHUTTER SPAN 'L'	MINIMUM SEPARATION FROM GLASS		POSITIVE ASD WINDLOAD 'W' (PSF)	SHUTTER SPAN 'L'	MINIMUM SEPARATION FROM GLASS	
		INSTALLATIONS ≤ 30' ABOVE GRADE	INSTALLATIONS > 30' ABOVE GRADE			INSTALLATIONS ≤ 30' ABOVE GRADE	INSTALLATIONS > 30' ABOVE GRADE
30	72"	3"	1-3/8"	27.5	72"	3"	1-1/2"
	104"	3"	2"		104"	3"	1-7/8"
	135"	5"	3-1/4"		144"	4-1/8"	3-1/8"
40	72"	3"	1-1/2"	40	72"	3"	1-1/2"
	104"	3"	2-1/8"		104"	3"	2"
	126"	5"	3-1/4"		133"	4-1/8"	3-1/4"
50	72"	3"	1-1/2"	50	72"	3"	1-1/2"
	104"	3"	2-3/8"		104"	3"	2-1/4"
	119"	5"	3-1/4"		126"	4-1/8"	3-1/4"
60	72"	3"	1-5/8"	60	72"	3"	1-5/8"
	104"	3"	2-5/8"		104"	3"	2-3/8"
	111"	5"	3"		120"	4-1/8"	3-1/4"
70	72"	3"	1-5/8"	70	72"	3"	1-5/8"
	103"	3"	2-3/4"		104"	3"	2-5/8"
80	72"	3"	1-5/8"		116"	4-1/8"	3-1/4"
	90"	3"	2-1/4"	80	72"	3"	1-5/8"
90	60"	3"	1-1/2"		104"	3"	2-3/4"
	80"	3"	2"		109"	4-1/8"	3-1/8"
100	60"	3"	1-1/2"	90	60"	3"	1-1/2"
	72"	3"	1-3/4"		102"	3"	2-7/8"
110	48"	3"	1-3/8"	100	60"	3"	1-1/2"
	65"	3"	1-5/8"		91"	3"	2-3/8"
120	48"	3"	1-3/8"	110	48"	3"	1-3/8"
	60"	3"	1-1/2"		83"	3"	2-1/8"
				120	48"	3"	1-3/8"
					76"	3"	2"

TABLE 1 & 2 NOTES:

1. SEE SECTIONS FOR SHUTTER SPAN DEFINITION.
2. FOR TABLE 1, DETERMINE BOTH THE POSITIVE AND NEGATIVE ASD WIND LOAD. CHECK THE MAX SPAN FOR EACH AND USE THE LESSER OF THE TWO VALUES.
3. FOR DESIGN LOADS BETWEEN TABULATED VALUES, USE NEXT HIGHER LOAD TO DETERMINE ALLOWABLE SPAN.
4. FOR TABLE 2, ENTER AT A POSITIVE LOAD ≥ PROJECT POSITIVE LOAD AND SPAN ≥ PROJECT SPAN TO DETERMINE MINIMUM SHUTTER SEPARATION FROM GLASS.

eyewall Armor™ HURRICANE PROTECTION

J.W. KNEZEVICH LICENSE NO. 41961 STATE OF FLORIDA PROFESSIONAL ENGINEER

07/30/2026

KNEZEVICH CONSULTING
KNEZEVICH CONSULTING, LLC
1600 S. Federal Hwy., Suite 961
Pompano Beach, FL 33062
T 954.772.6224 COA 27988
www.knezevich.com
Copyright © 2026 Knezevich Consulting, LLC

.050 & .0615 ALUMINUM STORM PANEL

Client / Manufacturer:
ABC Supply / Outdoor Solutions™
A DIVISION OF ABC SUPPLY CO., INC.
400 West McNab Road
Fort Lauderdale, FL 33309
phone: 954-970-9999
fax: 954-970-9988

Revisions

no	date	by	description
0	07/30/2026	JWK	FBC 2026 Update; formerly KC23-0710

Scale: AS NOTED
Drawn by: JWK
Date: 07/30/26

J.W. Knezevich
Professional Engineer
FL License No.: PE 41961

This item has been digitally signed and sealed by John W. Knezevich, PE on the date adjacent to the seal.

Signature must be verified on any electronic copies.

Drawing No.
KC26-0713
sheet 2 of 8

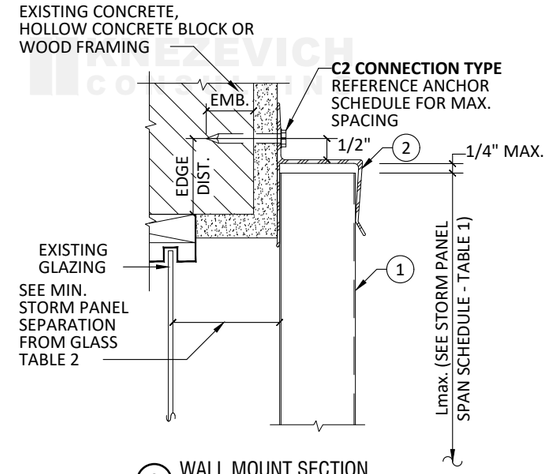

A WALL MOUNT SECTION
SCALE: 3" = 1' - 0"

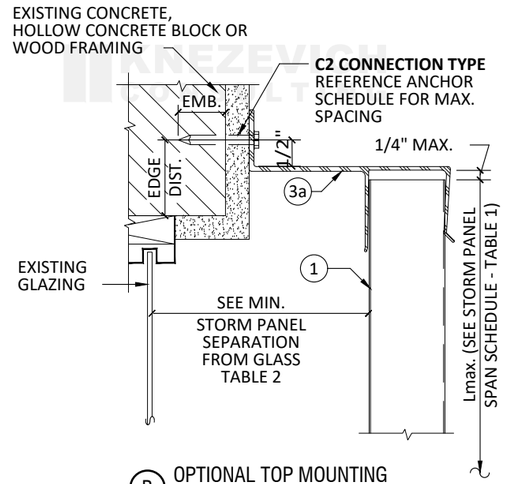

B OPTIONAL TOP MOUNTING
SCALE: 3" = 1' - 0"

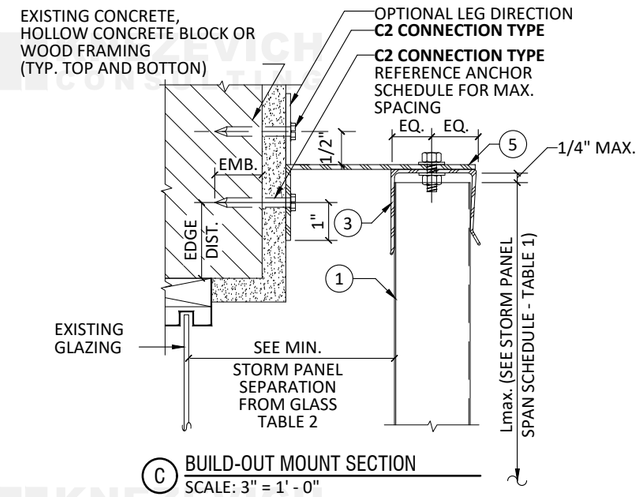

C BUILD-OUT MOUNT SECTION
SCALE: 3" = 1' - 0"

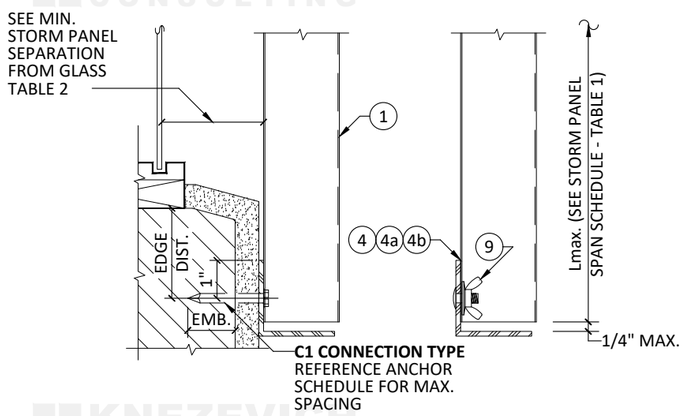

D WALL MOUNT SECTION
SCALE: 3" = 1' - 0"

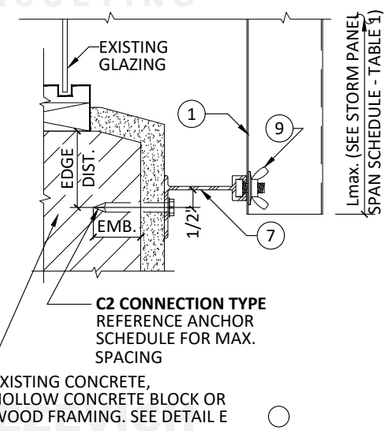

E BUILD OUT SECTION
SCALE: 3" = 1' - 0"

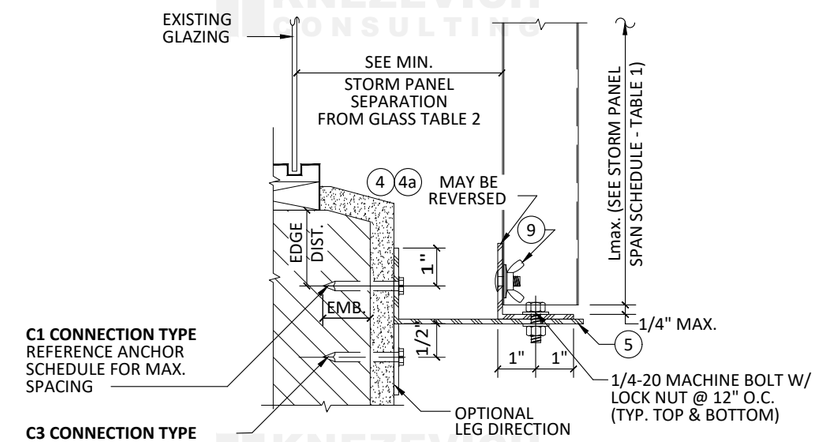

F BUILD-OUT MOUNT SECTION
SCALE: 3" = 1' - 0"

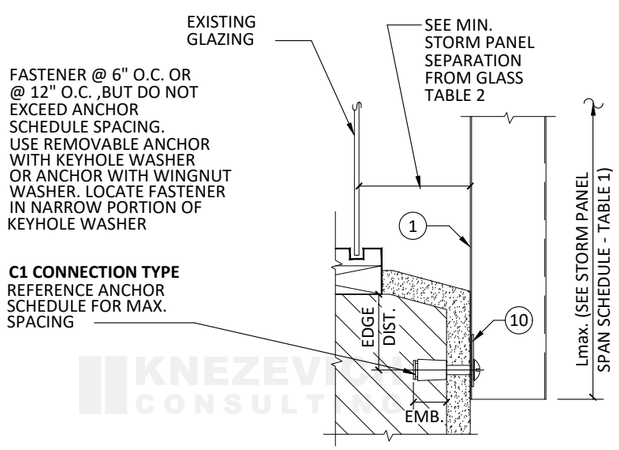

G DIRECT MOUNT SECTION
SCALE: 3" = 1' - 0"

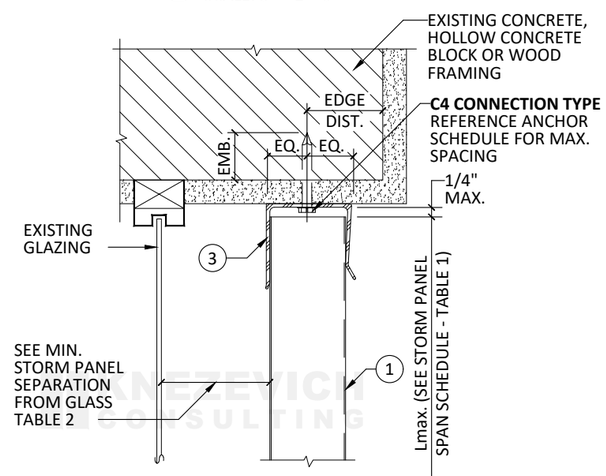

H CEILING MOUNT SECTION
SCALE: 3" = 1' - 0"

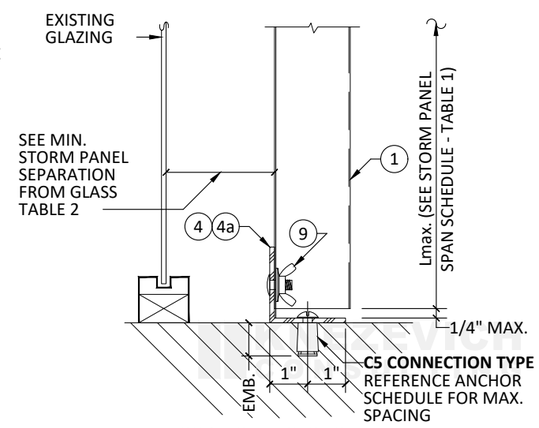

I FLOOR MOUNT SECTION
SCALE: 3" = 1' - 0"

eyewall Armor™
HURRICANE PROTECTION

J.W. KNEZEVICH
LICENSE
NO. 41961
STATE OF FLORIDA
PROFESSIONAL ENGINEER
07/30/2026

KNEZEVICH CONSULTING
KNEZEVICH CONSULTING, LLC
1600 S. Federal Hwy., Suite 961
Pompano Beach, FL 33062
T 954.772.6224 COA 27988
www.knezevich.com
Copyright © 2026 Knezevich Consulting, LLC

.050 & .0615 ALUMINUM STORM PANEL

Client / Manufacturer:
ABC Supply / Outdoor Solutions™
A DIVISION OF ABC SUPPLY CO., INC.
400 West McNab Road
Fort Lauderdale, FL 33309
phone: 954-970-9999
fax: 954-970-9988

Revisions

no	date	by	description
0	07/30/2026	JWK	FBC 2026 Update; formerly KC23-0710

Scale: AS NOTED
Drawn by: JWK
Date: 07/30/26

J.W. Knezevich
Professional Engineer
FL License No.: PE 41961

This item has been digitally signed and sealed by John W. Knezevich, PE on the date adjacent to the seal.

Signature must be verified on any electronic copies.

Drawing No.
KC26-0713
sheet 3 of 8

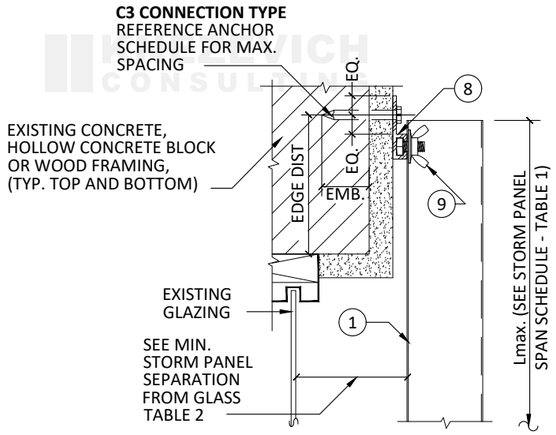

J "F" TRACK MOUNT SECTION
SCALE: 3" = 1' - 0"

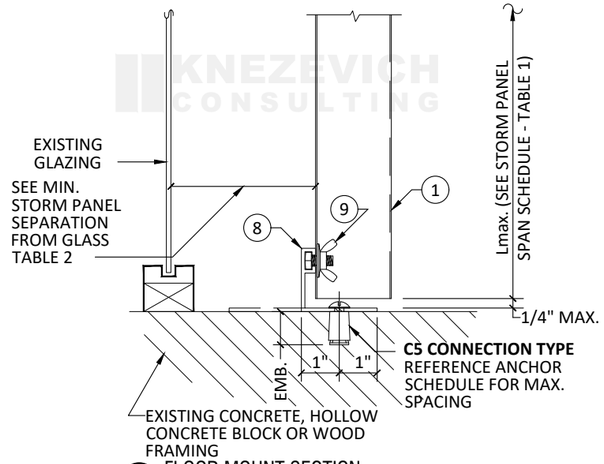

K FLOOR MOUNT SECTION
SCALE: 3" = 1' - 0"

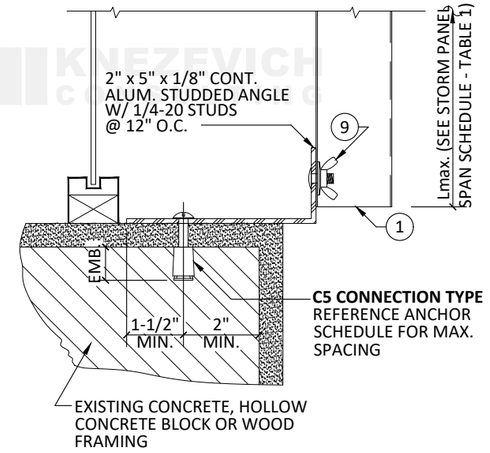

L BUILD-OUT SECTION
SCALE: 3" = 1' - 0"

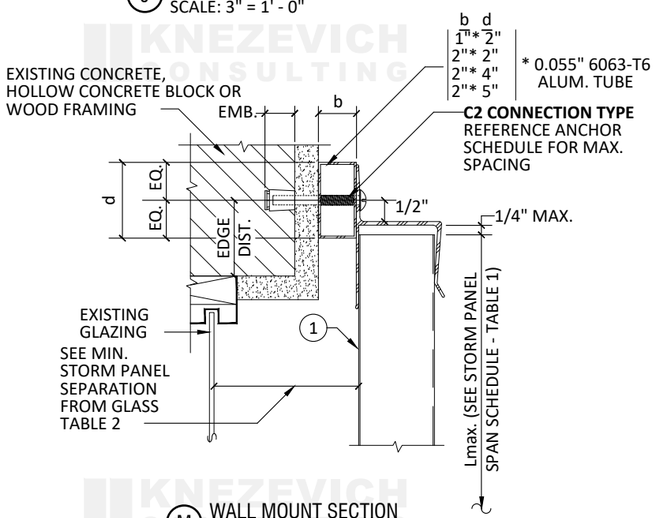

M WALL MOUNT SECTION
SCALE: 3" = 1' - 0"

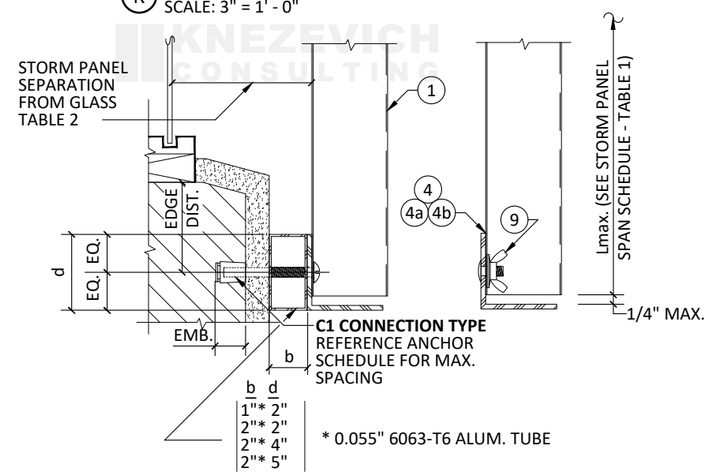

N WALL MOUNT SECTION
SCALE: 3" = 1' - 0"

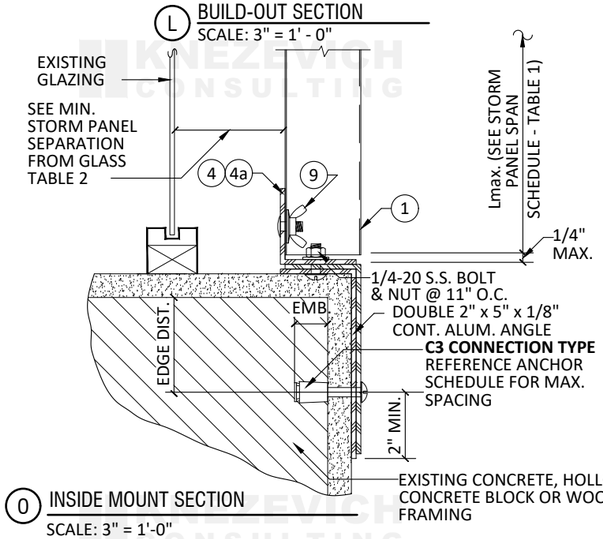

O INSIDE MOUNT SECTION
SCALE: 3" = 1'-0"

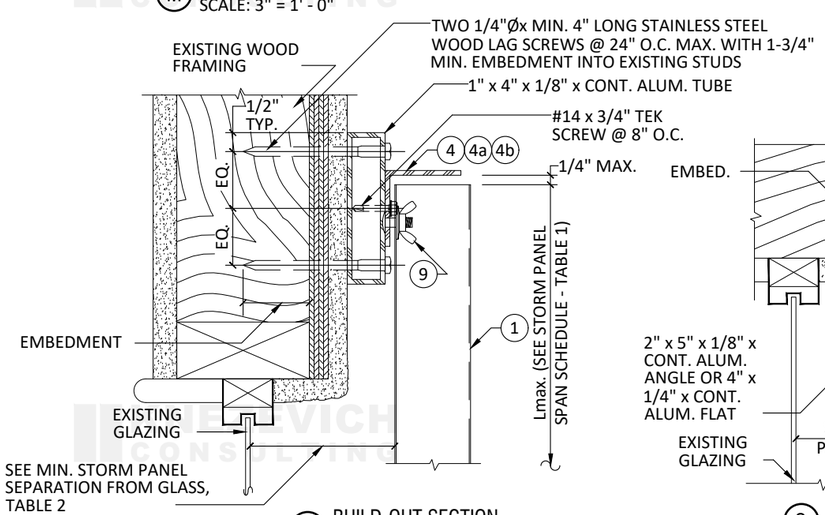

P BUILD-OUT SECTION
SCALE: 3" = 1' - 0"

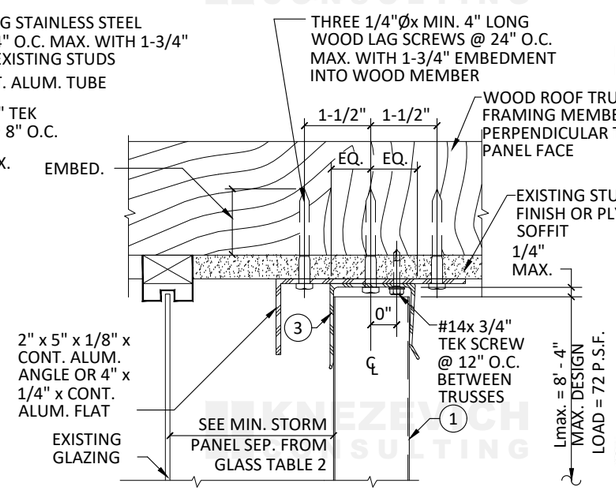

Q CEILING MOUNT SECTION
SCALE: 3" = 1' - 0"

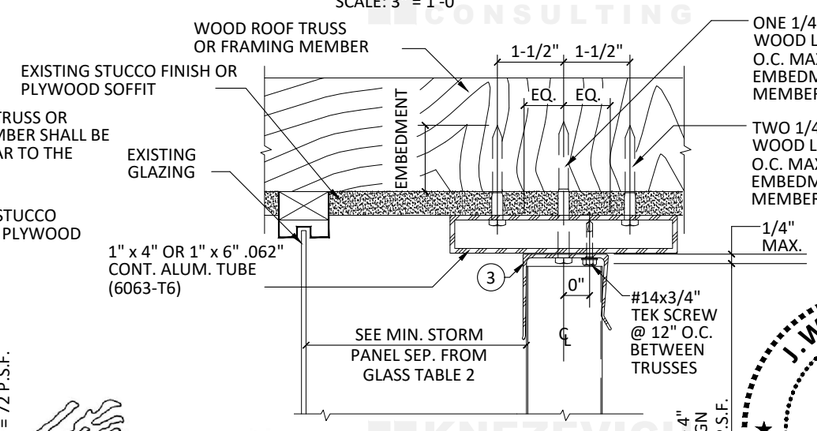

R BUILD-DOWN SECTION
SCALE: 3" = 1' - 0"

eyewall Armor™
HURRICANE PROTECTION

J.W. KNEZEVICH
LICENSE
NO. 41961
STATE OF FLORIDA
PROFESSIONAL ENGINEER

07/30/2026

KNEZEVICH CONSULTING
KNEZEVICH CONSULTING, LLC
1600 S. Federal Hwy., Suite 961
Pompano Beach, FL 33062
T 954.772.6224 * COA 27988
www.knezevich.com
Copyright © 2026 Knezevich Consulting, LLC

.050 & .0615 ALUMINUM STORM PANEL

Client / Manufacturer:
A DIVISION OF ABC SUPPLY CO., INC.
400 West McNab Road
Fort Lauderdale, FL 33309
phone: 954-970-9999
fax: 954-970-9988
ABC Supply / Outdoor Solutions™

Revisions

no	date	by	description
0	07/30/2026	JWK	FBC 2026 Update; formerly KC23-0710

Scale: AS NOTED
Drawn by: JWK
Date: 07/30/26

J.W. Knezevich
Professional Engineer
FL License No.: PE 41961

This item has been digitally signed and sealed by John W. Knezevich, PE on the date adjacent to the seal.

Signature must be verified on any electronic copies.

Drawing No.
KC26-0713
sheet 4 of 8

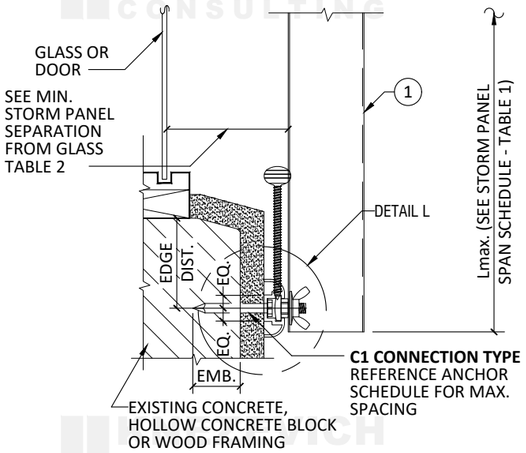

S1 C-TRACK ASSEMBLY - INSIDE MOUNT
SCALE: 3" = 1' - 0"

NOTE:

Use of inside mount detail with C-Track shall be in conjunction with an "h" header or "U" header top mount

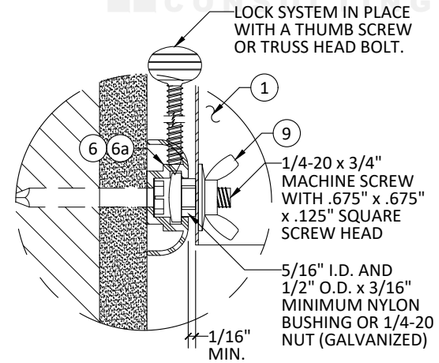

S2 C-TRACK BLOW UP
SCALE: HALF SIZE

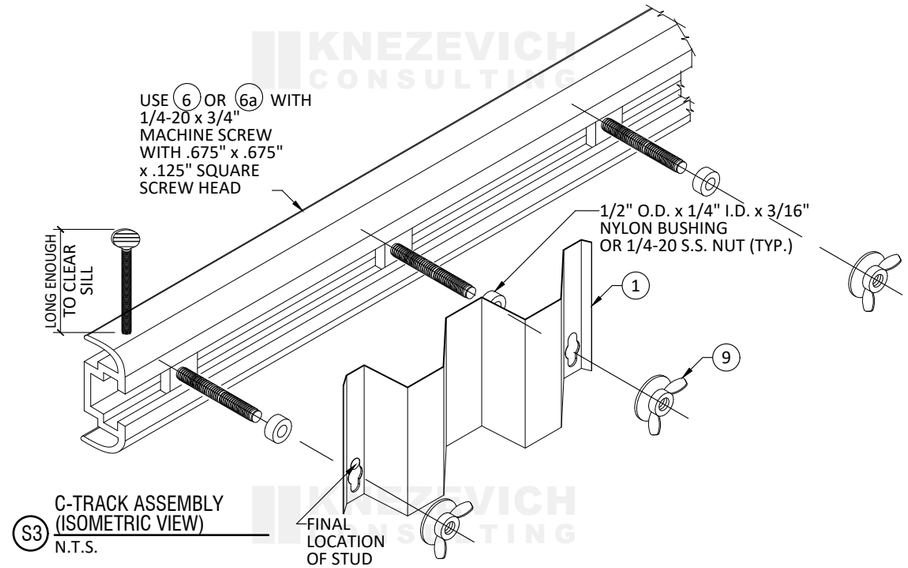

S3 C-TRACK ASSEMBLY (ISOMETRIC VIEW)
N.T.S.

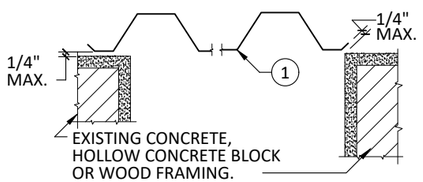

T1 WALL MOUNT CLOSURE DETAIL
SCALE: 1-1/2" = 1'-0"

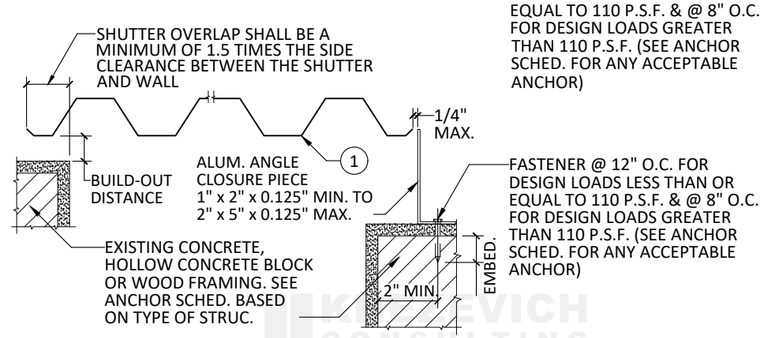

DESIGN LOADS LESS THAN OR EQUAL TO 110 P.S.F. & @ 8" O.C. FOR DESIGN LOADS GREATER THAN 110 P.S.F. (SEE ANCHOR SCHED. FOR ANY ACCEPTABLE ANCHOR)

T2 BUILD-OUT MOUNT CLOSURE DETAIL
SCALE: 1-1/2" = 1'-0"

FASTENER @ 12" O.C. FOR DESIGN LOADS LESS THAN OR EQUAL TO 110 P.S.F. & @ 8" O.C. FOR DESIGN LOADS GREATER THAN 110 P.S.F. (SEE ANCHOR SCHEDULE FOR ANY ACCEPTABLE ANCHOR)

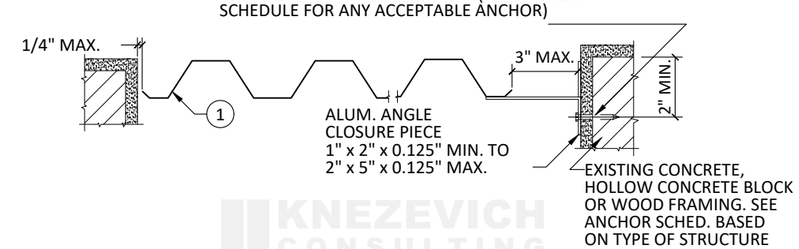

T3 TRAP MOUNT CLOSURE DETAIL
SCALE: 1-1/2" = 1'-0"

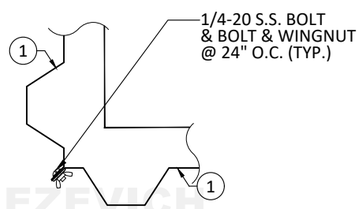

U1 CORNER CLOSURE DETAIL
SCALE: 1-1/2" = 1'-0"

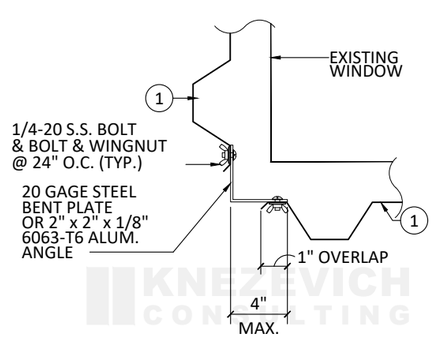

U2 CORNER CLOSURE DETAIL
SCALE: 1-1/2" = 1'-0"

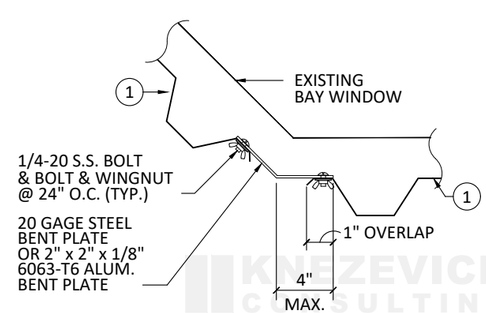

U3 CORNER CLOSURE DETAIL
SCALE: 1-1/2" = 1'-0"

eyewall Armor™
HURRICANE PROTECTION

J.W. KNEZEVICH
LICENSE
NO. 41961
STATE OF FLORIDA
PROFESSIONAL ENGINEER
07/30/2026

KNEZEVICH CONSULTING
KNEZEVICH CONSULTING, LLC
1600 S. Federal Hwy., Suite 961
Pompano Beach, FL 33062
T 954.772.6224 COA 27988
www.knezevich.com

Copyright © 2026 Knezevich Consulting, LLC

.050 & .0615 ALUMINUM STORM PANEL

Client / Manufacturer:
ABC Supply / Outdoor Solutions™
A DIVISION OF ABC SUPPLY CO., INC.
400 West McNab Road
Fort Lauderdale, FL 33309
phone: 954-970-9999
fax: 954-970-9988

Revisions

no	date	by	description
0	07/30/2026	JWK	FBC 2026 Update; formerly KC23-0710

Scale: AS NOTED
Drawn by: JWK
Date: 07/30/26

J.W. Knezevich
Professional Engineer
FL License No.: PE 41961

This item has been digitally signed and sealed by John W. Knezevich, PE on the date adjacent to the seal.

Signature must be verified on any electronic copies.

Drawing No.
KC26-0713
sheet 5 of 8

KNEZEVICH CONSULTING

ANCHOR SCHEDULE

FASTENER MAXIMUM SPACING (INCHES) REQUIRED FOR VARIOUS DESIGN LOADS AND SPANS

EXIST. STRUC.: WOOD

ANCHOR TYPE	MAX LOAD (PSF) SEE NOTE 1	SPANS UP TO 5'-0" (SEE NOTE 1) Connection Type (SEE NOTE 3)					SPANS UP TO 9'-0" (SEE NOTE 1) Connection Type (SEE NOTE 3)					SPANS UP TO 12'-0" (SEE NOTE 1) Connection Type (SEE NOTE 3)				
	W	0.75" Edge Distance														
		C1	C2	C3	C4	C5	C1	C2	C3	C4	C5	C1	C2	C3	C4	C5
1/4" Ø Lag Screw or Hanger Bolt w/ min 1.75" penetration in Wood with G ≥ 0.55	48.0	16	16	16	11	9	16	14	9	6	5	16	11	7	4	4
	62.0	16	16	13	8	7	16	11	7	4	4	16	8	5	3	3
	76.0	16	16	10	7	6	16	9	6	4	3	16	8	5	3	3
	90.0	16	14	9	6	5	16	8	5	3	3	16	8	5	3	3
	120.0	16	10	6	4	3	16	8	5	3	3	16	8	5	3	3
1/4" Ø Lag Screw or Hanger Bolt w/ min 1.75" penetration in Wood with G ≥ 0.42	W	0.75" Edge Distance														
		C1	C2	C3	C4	C5	C1	C2	C3	C4	C5	C1	C2	C3	C4	C5
	48.0	16	16	11	9	7	16	9	6	5	4	15	7	4	3	3
	62.0	16	13	8	7	5	15	7	4	4	3	11	5	3	3	
	76.0	16	11	7	5	4	12	6	3	3		11	5	3		
	90.0	16	9	6	5	4	11	5	3			11	5	3		
	120.0	14	7	4	3	3	11	5	3			11	5	3		
7/16" Ø Brass Wood Bushing w/ 7/8" embed in Wood with G ≥ 0.55 5/16"Φ pre-drilled hole	W	0.75" Edge Distance														
		C1	C2	C3	C4	C5	C1	C2	C3	C4	C5	C1	C2	C3	C4	C5
	48.0	16	8	5			9	4				7	3			
	62.0	13	6	4			7	3				5				
	76.0	10	5	3			6					5				
	90.0	9	4				5					5				
	120.0	6	3				5					5				
1/4" Ø Dewalt / Elco Panelmate Pro or Female ID w/ Stalgard Finish w/ 1-7/8" embed in Wood with G ≥ 0.55	W	0.75" Edge Distance														
		C1	C2	C3	C4	C5	C1	C2	C3	C4	C5	C1	C2	C3	C4	C5
	48.0	16	16	16	16	16	16	16	11	13	10	16	13	8	10	7
	62.0	16	16	15	16	14	16	13	8	10	7	16	10	6	7	5
	76.0	16	16	12	15	11	16	11	7	8	6	16	9	6	7	5
	90.0	16	16	10	12	9	16	9	6	7	5	16	9	6	7	5
	120.0	16	12	8	9	7	16	9	6	7	5	16	9	6	7	5
1/4" Ø E.A. Male, Female or Hex Head Bolt w/ min 2" embed in wood Shear ‖ or ⊥ to grain; G = 0.42	W	.75" Edge Distance														
		C1	C2	C3	C4	C5	C1	C2	C3	C4	C5	C1	C2	C3	C4	C5
	48.0	16	16	16	16	16	16	16	10	12	9	16	12	8	9	6
	62.0	16	16	15	16	12	16	13	8	9	7	16	9	6	7	5
	76.0	16	16	12	13	10	16	10	6	7	5	16	9	6	6	5
	90.0	16	16	10	11	8	16	9	6	6	5	16	9	6	6	5
	120.0	16	12	7	8	6	16	9	6	6	5	16	9	6	6	5

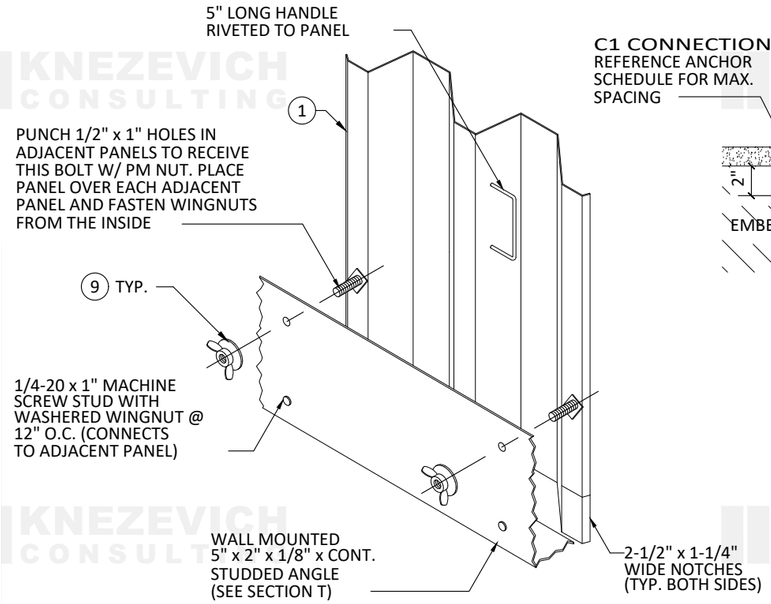

NOTE: NOT FOR USE AS EMERGENCY EGRESS

V1 OPTIONAL INTERIOR FASTENING DETAIL (ISOMETRIC)

N.T.S.

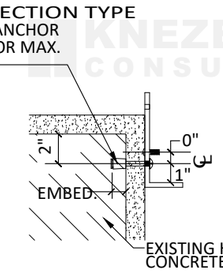

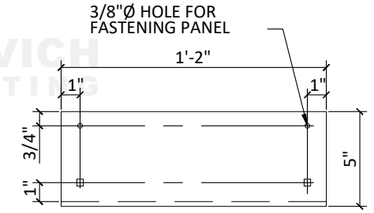

(MAX. PANEL HEIGHT = 7' - 4" & MAX. DESIGN LOAD 72.00 P.S.F.)

V2 INTERIOR FASTENING ANGLE ASSEMBLY

SCALE: 1-1/2" = 1'-0"

DETAILS V1 & V2 NOTE:

THESE DETAILS DEPICT THE CONNECTION OF THE LAST PANEL FOR AN OPENING WITH PANELS INSTALLED FROM INSIDE. USE OF THESE DETAILS SHALL BE IN CONJUNCTION WITH AN "h" HEADER OR "U" HEADER TOP MOUNT.

ANCHOR NOTES:

See Sheet 7 for Anchor Notes.

ANCHOR SCHEDULE

FASTENER MAXIMUM SPACING (INCHES) REQUIRED FOR VARIOUS DESIGN LOADS AND SPANS

EXIST. STRUC.: WOOD

ANCHOR TYPE	MAX LOAD (PSF) SEE NOTE 1	SPANS UP TO 5'-0" (SEE NOTE 1) Connection Type (SEE NOTE 3)					SPANS UP TO 9'-0" (SEE NOTE 1) Connection Type (SEE NOTE 3)					SPANS UP TO 12'-0" (SEE NOTE 1) Connection Type (SEE NOTE 3)				
	W	0.75" Edge Distance														
		C1	C2	C3	C4	C5	C1	C2	C3	C4	C5	C1	C2	C3	C4	C5
#14 Stainless Steel Wood Screw or #14-10 Stainless Steel SMS w/ 1.5" embed in Wood with G ≥ 0.55	48.0	16	16	12	12	9	16	11	7	7	5	16	8	5	5	4
	62.0	16	15	9	9	7	16	8	5	5	4	13	6	4	4	3
	76.0	16	12	8	7	6	14	7	4	4	3	13	6	4	3	3
	90.0	16	10	6	6	5	13	6	4	3	3	13	6	4	3	3
	120.0	16	7	5	5	3	13	6	4	3	3	13	6	4	3	3
#14 Stainless Steel Wood Screw or #14-10 Stainless Steel SMS w/ 1.5" embed in Wood with G ≥ 0.42	W	0.75" Edge Distance														
		C1	C2	C3	C4	C5	C1	C2	C3	C4	C5	C1	C2	C3	C4	C5
	48.0	16	11	7	9	6	13	6	4	5	3	10	4	3	3	
	62.0	16	8	5	7	5	10	4	3	4	3	7	3		3	
	76.0	15	7	4	6	4	8	4		3		7	3			
	90.0	12	6	3	5	3	7	3				7	3			
	120.0	9	4		3		7	3				7	3			

eyewall Armor™ HURRICANE PROTECTION

J.W. KNEZEVICH LICENSE NO. 41961 STATE OF FLORIDA PROFESSIONAL ENGINEER

07/30/2026

KNEZEVICH CONSULTING
KNEZEVICH CONSULTING, LLC
1600 S. Federal Hwy., Suite 961
Pompano Beach, FL 33062
T 954.772.6224 COA 27988
www.knezevich.com
Copyright © 2026 Knezevich Consulting, LLC

.050 & .0615 ALUMINUM STORM PANEL

Client / Manufacturer: ABC Supply / Outdoor Solutions™ — A DIVISION OF ABC SUPPLY CO., INC. 400 West McNab Road Fort Lauderdale, FL 33309 phone: 954-970-9999 fax: 954-970-9988

Revisions

no	date	by	description
0	07/30/2026	JWK	FBC 2026 Update; formerly KC23-0710

Scale: AS NOTED
Drawn by: JWK
Date: 07/30/26

J.W. Knezevich
Professional Engineer
FL License No.: PE 41961

This item has been digitally signed and sealed by John W. Knezevich, PE on the date adjacent to the seal.

Signature must be verified on any electronic copies.

Drawing No.
KC26-0713
sheet 6 of 8

ANCHOR SCHEDULE

FASTENER MAXIMUM SPACING (INCHES) REQUIRED FOR VARIOUS DESIGN LOADS AND SPANS

EXIST. STRUC.: CONCRETE

ANCHOR TYPE	MAX LOAD (PSF) SEE NOTE 1	SPANS UP TO 5'-0" (SEE NOTE 1) Connection Type (SEE NOTE 3)					SPANS UP TO 9'-0" (SEE NOTE 1) Connection Type (SEE NOTE 3)					SPANS UP TO 12'-0" (SEE NOTE 1) Connection Type (SEE NOTE 3)					SPANS UP TO 5'-0" (SEE NOTE 1) Connection Type (SEE NOTE 3)					SPANS UP TO 9'-0" (SEE NOTE 1) Connection Type (SEE NOTE 3)					SPANS UP TO 12'-0" (SEE NOTE 1) Connection Type (SEE NOTE 3)				
	W	1.5" Edge Distance															3" Edge Distance													
		C1	C2	C3	C4	C5	C1	C2	C3	C4	C5	C1	C2	C3	C4	C5	C1	C2	C3	C4	C5	C1	C2	C3	C4	C5	C1	C2	C3	C4	C5
1/4" Ø ITW Tapcon w / Climaseal Coating w / 1.75" embed in 3 ksi Concrete	48.0	16	16	14	16	16	16	12	8	15	11	16	9	6	11	8	16	16	15	16	16	16	13	8	16	14	16	10	6	15	10
	62.0	16	16	11	16	16	16	9	6	12	9	15	7	4	9	6	16	16	12	16	16	16	10	6	16	11	16	7	5	12	8
	76.0	16	14	9	16	13	16	7	5	9	7	14	7	4	8	6	16	15	9	16	16	16	8	5	13	9	15	7	4	12	8
	90.0	16	11	7	15	11	14	7	4	8	6	14	7	4	8	6	16	13	8	16	14	15	7	4	12	8	15	7	4	12	8
	120.0	16	8	5	11	8	14	7	4	8	6	14	7	4	8	6	16	9	6	15	10	15	7	4	12	8	15	7	4	12	8
	W	1.25 Edge Distance															2.5" Edge Distance													
		C1	C2	C3	C4	C5	C1	C2	C3	C4	C5	C1	C2	C3	C4	C5	C1	C2	C3	C4	C5	C1	C2	C3	C4	C5	C1	C2	C3	C4	C5
1/4" Ø ITW Tapcon Stainless Steel w / 1.75" embed in 3 ksi Concrete	48.0	16	16	11	16	14	16	9	6	10	8	15	7	4	7	6	16	16	13	16	16	16	11	7	16	13	16	8	5	16	10
	62.0	16	13	8	13	11	15	7	4	7	6	11	5		5	4	16	16	10	16	16	16	8	5	16	10	13	6	4	13	8
	76.0	16	11	7	11	9	12	6	4	6	5	11	5		5	4	16	13	8	16	15	15	7	4	14	8	13	6	4	12	7
	90.0	16	9	6	9	7	11	5		5	4	11	5		5	4	16	11	7	16	13	13	6	4	12	7	13	6	4	12	7
	120.0	14	7	4	7	5	11	5		5	4	11	5		5	4	16	8	5	16	9	13	6	4	12	7	13	6	4	12	7
	W	1.25" Edge Distance															2.5" Edge Distance													
		C1	C2	C3	C4	C5	C1	C2	C3	C4	C5	C1	C2	C3	C4	C5	C1	C2	C3	C4	C5	C1	C2	C3	C4	C5	C1	C2	C3	C4	C5
1/4" Ø Dewalt Ultracon+ w / Stalgard Coating w / 1.75" embed in 3.1 ksi Concrete	48.0	16	16	16	16	14	16	14	9	9	8	16	10	6	6	6	16	16	16	16	16	16	16	10	16	16	16	12	7	16	12
	62.0	16	16	12	12	11	16	10	7	7	6	16	8	5	5	4	16	16	14	16	16	16	12	8	16	12	16	9	6	13	9
	76.0	16	16	10	10	9	16	8	5	5	5	16	7	5	5	4	16	16	12	16	16	16	10	6	14	10	16	9	5	12	9
	90.0	16	13	8	8	7	16	7	5	5	4	16	7	5	5	4	16	15	10	16	15	16	9	5	12	9	16	9	5	12	9
	120.0	16	10	6	6	5	16	7	5	5	4	16	7	5	5	4	16	11	7	16	11	16	9	5	12	9	16	9	5	12	9
	W	1.25" Edge Distance															3" Edge Distance													
		C1	C2	C3	C4	C5	C1	C2	C3	C4	C5	C1	C2	C3	C4	C5	C1	C2	C3	C4	C5	C1	C2	C3	C4	C5	C1	C2	C3	C4	C5
* 1/4" Ø Hillman Group Solid-Set Anchor w / 7/8" embed in 3.0 ksi Concrete & 1/4-20 Stainless Steel Machine Screw	48.0	16	15	10	15	10	16	8	5	8	5	13	6	4	6	4	16	16	16	16	16	16	14	9	16	13	16	10	7	16	9
	62.0	16	12	7	11	8	14	6	4	6	4	10	5	3	4	3	16	16	13	16	16	16	11	7	16	10	16	8	5	12	7
	76.0	16	9	6	9	6	11	5	3	5	3	10	4	3	4	3	16	16	10	16	14	16	9	5	13	8	16	8	5	12	7
	90.0	16	8	5	8	5	10	4	3	4	3	10	4	3	4	3	16	13	9	16	12	16	8	5	12	7	16	8	5	12	7
	120.0	13	6	4	6	4	10	4	3	4	3	10	4	3	4	3	16	10	6	15	9	16	8	5	12	7	16	8	5	12	7
	W	1.25" Edge Distance															2.5" Edge Distance													
		C1	C2	C3	C4	C5	C1	C2	C3	C4	C5	C1	C2	C3	C4	C5	C1	C2	C3	C4	C5	C1	C2	C3	C4	C5	C1	C2	C3	C4	C5
1/4" Ø T&C-UltracoteTM Concrete Screw by Millennium Fasteners w / 1.75" embed in 3.3 ksi Concrete	48.0	16	16	10	16	16	16	9	5	14	9	14	6	4	10	7	16	16	13	16	16	16	11	7	16	13	16	8	5	16	10
	62.0	16	12	8	16	13	14	7	4	11	7	11	5		8	5	16	16	10	16	16	16	9	5	16	10	14	6	4	12	7
	76.0	16	10	6	16	11	12	5		9	6	10	5		8	5	16	13	8	16	15	15	7	4	14	8	13	6	4	12	7
	90.0	16	8	5	14	9	10	5		8	5	10	5		8	5	16	11	7	16	13	13	6	4	12	7	13	6	4	12	7
	120.0	13	6	4	10	7	10	5		8	5	10	5		8	5	16	8	5	16	9	13	6	4	12	7	13	6	4	12	7
	W	1.5" Edge Distance															3.0" Edge Distance													
		C1	C2	C3	C4	C5	C1	C2	C3	C4	C5	C1	C2	C3	C4	C5	C1	C2	C3	C4	C5	C1	C2	C3	C4	C5	C1	C2	C3	C4	C5
1/4" Ø 410 SS Powers Tapper w / 1.75" embed in 3.0 ksi Concrete	48.0	16	14	9	16	12	16	8	5	11	7	12	6	3	8	5	16	16	16	16	16	16	16	10	16	14	16	12	7	16	10
	62.0	16	11	7	16	10	13	6	4	9	5	9	4	3	6	4	16	16	14	16	16	16	12	8	16	11	16	9	6	13	8
	76.0	16	9	5	13	8	10	5	3	7	4	9	4		6	4	16	16	11	16	16	16	10	6	14	9	16	9	5	13	8
	90.0	16	7	5	11	6	9	4		6	4	9	4		6	4	16	15	10	16	13	16	9	5	13	8	16	9	5	13	8
	120.0	12	5	3	8	5	9	4		6	4	9	4		6	4	16	11	7	16	10	16	9	5	13	8	16	9	5	13	8
	W	1.25" Edge Distance															2.5" Edge Distance													
		C1	C2	C3	C4	C5	C1	C2	C3	C4	C5	C1	C2	C3	C4	C5	C1	C2	C3	C4	C5	C1	C2	C3	C4	C5	C1	C2	C3	C4	C5
* * 1/4" Ø E.A. Male, Female or Hex Head Bolt w / 2.5" embed in 2.9 ksi Concrete	48.0	16	15	10	15	12	16	8	5	8	6	13	6	4	6	5	16	15	10	16	16	16	8	5	16	10	13	6	4	13	8
	62.0	16	12	7	11	9	13	6	4	6	5	10	5	3	4	3	16	12	7	16	15	14	6	4	14	8	10	5	3	10	6
	76.0	16	9	6	9	7	11	5	3	5	4	10	4	3	4	3	16	9	6	16	12	11	5	3	11	6	10	4	3	10	6
	90.0	16	8	5	8	6	10	4	3	4	3	10	4	3	4	3	16	8	5	16	10	10	4	3	10	6	10	4	3	10	6
	120.0	13	6	4	6	4	10	4	3	4	3	10	4	3	4	3	13	6	4	13	7	10	4	3	10	6	10	4	3	10	6

ANCHOR SCHEDULE

FASTENER MAXIMUM SPACING (INCHES) REQUIRED FOR VARIOUS DESIGN LOADS AND SPANS

EXIST. STRUC.: CONCRETE

ANCHOR TYPE	MAX LOAD (PSF) SEE NOTE 1	SPANS UP TO 5'-0" (SEE NOTE 1) Connection Type (SEE NOTE 3)					SPANS UP TO 9'-0" (SEE NOTE 1) Connection Type (SEE NOTE 3)					SPANS UP TO 12'-0" (SEE NOTE 1) Connection Type (SEE NOTE 3)				
	W	2.5 Edge Distance														
		C1	C2	C3	C4	C5	C1	C2	C3	C4	C5	C1	C2	C3	C4	C5
* 1/4" Ø Dewalt Panelmate Pro or Female ID w / Stalgard Finish w / 1-3/4" embed in 3.35 ksi Concrete	48.0	16	16	16	16	16	16	14	9	16	14	16	11	7	15	11
	62.0	16	16	13	16	16	16	11	7	15	11	16	8	5	11	8
	76.0	16	16	10	16	16	16	9	6	13	9	16	8	5	11	8
	90.0	16	14	9	16	14	16	8	5	11	8	16	8	5	11	8
	120.0	16	10	6	14	10	16	8	5	11	8	16	8	5	11	8
	W	2.0" Edge Distance														
		C1	C2	C3	C4	C5	C1	C2	C3	C4	C5	C1	C2	C3	C4	C5
#12 Stainless Steel SMS w / 2.0" Eyewall Armor Insert w / 2.0" screw embedment in 2.0 ksi Concrete	48.0	16	16	14	16	16	16	12	8	15	10	16	9	6	11	7
	62.0	16	16	11	16	14	16	9	6	12	7	15	7	4	9	5
	76.0	16	14	9	16	11	16	7	5	9	6	14	7	4	8	5
	90.0	16	12	7	15	9	14	7	4	8	5	14	7	4	8	5
	120.0	16	9	5	11	7	14	7	4	8	5	14	7	4	8	5
	W	2.0" Edge Distance														
		C1	C2	C3	C4	C5	C1	C2	C3	C4	C5	C1	C2	C3	C4	C5
#12 Stainless Steel SMS w / 2.75" Eyewall Armor Insert w / 2.5" screw embedment in 2.0 ksi Concrete	48.0	16	16	16	16	16	16	15	9	16	11	16	11	7	12	8
	62.0	16	16	13	16	15	16	11	7	12	8	16	8	5	9	6
	76.0	16	16	11	16	12	16	9	6	10	7	16	8	5	9	6
	90.0	16	14	9	15	10	16	8	5	9	6	16	8	5	9	6
	120.0	16	11	7	11	8	16	8	5	9	6	16	8	5	9	6

ANCHOR NOTES:

1. Spans and loads shown here are for determining anchor spacing only. Allowable shutter spans for specific loads must be limited to those shown in Table 1 on Sheet 2.
2. An Effective Wind Area of 10 ft^2 shall be used for determining wind loads for anchors.
3. See mounting section details for identification of Connection Type.
4. Enter Anchor Schedule based on the existing structure material, anchor type and edge distance. Select Design Load greater than or equal to Negative Design Load on shutter and select Span greater than or equal to Shutter Span.
5. Existing structure may be concrete, ASTM C90 hollow or grout filled concrete block, or wood framing. Reference Anchor Schedule for proper anchor type based on type of existing structure.
6. Anchors shall be installed in accordance with manufacturers' recommendations.
7. Minimum embedment and edge distance excludes wall finish or stucco.
8. Where existing structure is post-tensioned concrete, Contractor shall locate cables prior to anchoring and coordinate anchorage such that cables are not damaged.
9. Where existing structure is wood framing, wood framing conditions vary. Field verify that fasteners are into adequate wood framing members, not plywood. Fastening to plywood is acceptable only for side closure pieces.
10. Where lag screws fasten to narrow face of stud framing, fastener shall be located in center of nominal 2" x 4" (min.) wood stud. 3/4" edge distance is acceptable for wood framing. Wood stud shall have a minimum density as noted in Anchor Schedule. Lag screws shall have phillips pan head or hex head.
11. Machine screws shall have minimum of 1/2" engagement of threads in base anchor and may have either a pan head, truss head, or wafer head (sidewalk bolt), u.o.n.
12. ▨ designates anchor conditions which are not acceptable uses.
13. * designates anchors which are removable by removing machine screw, nut or washered wingnut.
14. All concrete anchors shall be installed in un-cracked concrete only with minimum concrete strengths as noted in Anchor Schedule.
15. When anchoring to concrete block, SDS and Impact Drills shall not be used to drill into block or to install concrete screws.
16. The selected anchor shall comply with FBC Section 1711.1.
    a. For locations within 300 ft of a coastal shoreline, anchors shall be stainless steel anchors complying with FBC Section 1711.1.1.1.
    b. For locations greater than 300 ft and less than 3,000 ft from of a coastal shoreline, anchors shall have corrosion resistance complying with FBC Section 1711.1.1.2. Verify compliance w/ anchor manufacture.

eyewall Armor™ HURRICANE PROTECTION

J.W. KNEZEVICH LICENSE NO. 41961 STATE OF FLORIDA PROFESSIONAL ENGINEER

07/30/2026

KNEZEVICH CONSULTING

KNEZEVICH CONSULTING, LLC
1600 S. Federal Hwy., Suite 961
Pompano Beach, FL 33062
T 954.772.6224 COA 27988
www.knezevich.com

Copyright © 2026 Knezevich Consulting, LLC

.050 & .0615 ALUMINUM STORM PANEL

Client / Manufacturer: ABC Supply / Outdoor Solutions™ — A DIVISION OF ABC SUPPLY CO., INC. 400 West McNab Road Fort Lauderdale, FL 33309 phone: 954-970-9999 fax: 954-970-9988

Revisions

no	date	by	description
0	07/30/2026	JWK	FBC 2026 Update; formerly KC23-0710

Scale: AS NOTED
Drawn by: JWK
Date: 07/30/26

J.W. Knezevich
Professional Engineer
FL License No.: PE 41961

This item has been digitally signed and sealed by John W. Knezevich, PE on the date adjacent to the seal.

Signature must be verified on any electronic copies.

Drawing No.
KC26-0713
sheet 7 of 8

ANCHOR SCHEDULE

FASTENER MAXIMUM SPACING (INCHES) REQUIRED FOR VARIOUS DESIGN LOADS AND SPANS

EXIST. STRUC.: Hollow Block

ANCHOR TYPE	MAX LOAD (PSF) SEE NOTE 1	SPANS UP TO 5'-0" (SEE NOTE 1) Connection Type (SEE NOTE 3)					SPANS UP TO 9'-0" (SEE NOTE 1) Connection Type (SEE NOTE 3)					SPANS UP TO 12'-0" (SEE NOTE 1) Connection Type (SEE NOTE 3)					SPANS UP TO 5'-0" (SEE NOTE 1) Connection Type (SEE NOTE 3)					SPANS UP TO 9'-0" (SEE NOTE 1) Connection Type (SEE NOTE 3)					SPANS UP TO 12'-0" (SEE NOTE 1) Connection Type (SEE NOTE 3)				
	W	2" Edge Distance															4" Edge Distance													
		C1	C2	C3	C4	C5	C1	C2	C3	C4	C5	C1	C2	C3	C4	C5	C1	C2	C3	C4	C5	C1	C2	C3	C4	C5	C1	C2	C3	C4	C5
1/4" Ø ITW Tapcon w / Climaseal Coating w / 1.0" embed in Hollow Block	48.0	11	5		10	5	6			5		4			4		11	5		11	6	6			6		4			4	
	62.0	9	4		7	4	5			4							9	4		9	4	5			5						
	76.0	7			6		4										7			7		4			4						
	90.0	6			5												6			6											
	120.0	4			4												4			4											

	W	1.25" Edge Distance															2.5" Edge Distance													
		C1	C2	C3	C4	C5	C1	C2	C3	C4	C5	C1	C2	C3	C4	C5	C1	C2	C3	C4	C5	C1	C2	C3	C4	C5	C1	C2	C3	C4	C5
1/4" Ø Dewalt Ultracon+ w / Stalgard Coating w / 1.25" embed in Hollow Block	48.0	15	7	4	11	6	8	4		6	3	6	3		4		16	8	5	16	8	9	4	3	9	4	7	3		7	3
	62.0	12	5	3	8	5	6	3		4		5			3		13	6	4	13	6	7	3		7	3	5			5	
	76.0	9	4	3	7	4	5			3		4			3		11	5	3	10	5	6			6	3	5			5	
	90.0	8	3		5	3	4			3		4			3		9	4		9	4	5			5		5			5	
	120.0	6			4		4			3		4			3		7	3		6	3	5			5		5			5	

	W	1.25" Edge Distance															3" Edge Distance													
		C1	C2	C3	C4	C5	C1	C2	C3	C4	C5	C1	C2	C3	C4	C5	C1	C2	C3	C4	C5	C1	C2	C3	C4	C5	C1	C2	C3	C4	C5
1/4" Ø Hillman Group Solid-Set Anchor w / 7/8" embed in Hollow Block & 1/4-20 Stainless Steel Machine Screw	48.0	16	7	5	9	6	9	4		5	3	6	3		3		16	15	9	16	13	16	8	5	12	7	13	6	4	9	5
	62.0	12	6	3	7	4	7	3		4		5			3		16	11	7	16	10	13	6	4	9	5	10	4	3	7	4
	76.0	10	5	3	5	3	5			3		5					16	9	6	14	8	11	5	3	7	4	9	4	3	7	4
	90.0	8	4		4	3	5					5					16	8	5	11	7	9	4	3	7	4	9	4	3	7	4
	120.0	6	3		3		5					5					12	6	3	8	5	9	4	3	7	4	9	4	3	7	4

	W	1.25" Edge Distance															2.5" Edge Distance													
		C1	C2	C3	C4	C5	C1	C2	C3	C4	C5	C1	C2	C3	C4	C5	C1	C2	C3	C4	C5	C1	C2	C3	C4	C5	C1	C2	C3	C4	C5
1/4" Ø T&C-UltracoteTM Concrete Screw by Millennium Fasteners w / 1.25" embed in Hollow Block	48.0	16	8	5	9	6	9	4		5		7			4		16	8	5	16	9	10	4		9	5	7			6	
	62.0	13	6	4	7	4	7			4		5					14	6	4	12	7	7			7		5			5	
	76.0	10	5		6		5					5					11	5		10	5	6			5		5			5	
	90.0	8	4		5		5					5					9	4		8	4	5			5		5			5	
	120.0	6					5					5					7			6		5			5		5			5	

	W	1.25 Edge Distance															1.25" Edge Distance													
		C1	C2	C3	C4	C5	C1	C2	C3	C4	C5	C1	C2	C3	C4	C5	C1	C2	C3	C4	C5	C1	C2	C3	C4	C5	C1	C2	C3	C4	C5
1/4" Ø E.A. Male, Female or Hex Head Bolt w / 1.25" embed in Hollow Block	48.0	16	16	11	16	16	16	9	6	14	9	15	7	4	10	7	16	16	11	16	16	16	9	6	14	9	15	7	4	10	7
	62.0	16	13	8	16	13	15	7	4	10	7	11	5		8	5	16	13	8	16	13	15	7	4	10	7	11	5		8	5
	76.0	16	11	7	15	11	12	6		8	6	11	5		7	5	16	11	7	15	11	12	6		8	6	11	5		7	5
	90.0	16	9	6	13	9	11	5		7	5	11	5		7	5	16	9	6	13	9	11	5		7	5	11	5		7	5
	120.0	14	7	4	10	7	11	5		7	5	11	5		7	5	14	7	4	10	7	11	5		7	5	11	5		7	5

ANCHOR SCHEDULE

FASTENER MAXIMUM SPACING (INCHES) REQUIRED FOR VARIOUS DESIGN LOADS AND SPANS

EXIST. STRUC.: Hollow Block

ANCHOR TYPE	MAX LOAD (PSF) SEE NOTE 1	SPANS UP TO 5'-0" (SEE NOTE 1) Connection Type (SEE NOTE 3)					SPANS UP TO 9'-0" (SEE NOTE 1) Connection Type (SEE NOTE 3)					SPANS UP TO 12'-0" (SEE NOTE 1) Connection Type (SEE NOTE 3)				
	W	3" Edge Distance														
		C1	C2	C3	C4	C5	C1	C2	C3	C4	C5	C1	C2	C3	C4	C5
1/4" Elco Panelmate Pro or Female ID w / Stalgard Coating w / 1-1/4" embed in Hollow Block	48.0	16	10	6	14	8	11	5		7	4	8	4		5	
	62.0	16	7	5	11	6	9	4		6		6			4	
	76.0	13	6	4	9	5	7			5		6			4	
	90.0	11	5		7	4	6			4		6			4	
	120.0	8	4		5		6			4		6			4	

	W	2" Edge Distance														
		C1	C2	C3	C4	C5	C1	C2	C3	C4	C5	C1	C2	C3	C4	C5
#12 Stainless Steel SMS w / 2" Eyewall Armor Insert w / 1-1/4" screw embed in Hollow Block	48.0	16	11	7	14	9	12	6	3	8	5	9	4		6	3
	62.0	16	8	5	11	7	9	4	3	6	3	7	3		4	
	76.0	14	6	4	9	5	8	3		5	3	7	3		4	
	90.0	12	5	3	7	4	7	3		4		7	3		4	
	120.0	9	4		5	3	7	3		4		7	3		4	

	W	3" Edge Distance														
		C1	C2	C3	C4	C5	C1	C2	C3	C4	C5	C1	C2	C3	C4	C5
1/4" Ø 304 or 410 SS Powers Tapper or Perma-Seal Coated Tapper+ w / 1.25" embed in Hollow Block	48.0	11	5		11	5	6			6		4			4	
	62.0	8	4		8	4	4			4						
	76.0	7			7		4									
	90.0	6			5											
	120.0	4			4											

ANCHOR SCHEDULE

FASTENER MAXIMUM SPACING (INCHES) REQUIRED FOR VARIOUS DESIGN LOADS AND SPANS

EXIST. STRUC.: Grouted Block

ANCHOR TYPE	MAX LOAD (PSF) SEE NOTE 1	SPANS UP TO 5'-0" (SEE NOTE 1) Connection Type (SEE NOTE 3)					SPANS UP TO 9'-0" (SEE NOTE 1) Connection Type (SEE NOTE 3)					SPANS UP TO 12'-0" (SEE NOTE 1) Connection Type (SEE NOTE 3)				
	W	2" Edge Distance														
		C1	C2	C3	C4	C5	C1	C2	C3	C4	C5	C1	C2	C3	C4	C5
#12 Stainless Steel SMS w / 2" Eyewall Armor Insert w / 2.0" screw embed in Grouted Block	48.0	16	16	11	16	11	16	10	6	9	6	15	7	4	6	4
	62.0	16	14	9	12	9	16	7	5	7	5	12	5	3	5	3
	76.0	16	11	7	10	7	13	6	4	5	4	11	5	3	5	3
	90.0	16	9	6	8	6	11	5	3	5	3	11	5	3	5	3
	120.0	15	7	4	6	4	11	5	3	5	3	11	5	3	5	3

	W	2.5" Edge Distance														
		C1	C2	C3	C4	C5	C1	C2	C3	C4	C5	C1	C2	C3	C4	C5
5/16" Ø Elco or Dewalt Ultracon w / 2.25" embed in Grouted Block	48.0	16	13	9	16	13	16	7	5	13	7	12	5	3	10	5
	62.0	16	10	6	16	10	12	6	3	10	5	9	4		7	4
	76.0	16	8	5	15	8	10	4	3	8	4	9	4		7	4
	90.0	15	7	4	12	7	9	4		7	4	9	4		7	4
	120.0	11	5	3	9	5	9	4		7	4	9	4		7	4

	W	1.25" Edge Distance														
		C1	C2	C3	C4	C5	C1	C2	C3	C4	C5	C1	C2	C3	C4	C5
1/4" Ø E.A. Male, Female or Hex Head Bolt w / 2.5" embed in Grouted Block	48.0	16	16	13	16	16	16	11	7	16	11	16	8	5	12	8
	62.0	16	16	10	16	16	16	8	5	12	9	14	6	4	9	6
	76.0	16	13	8	16	13	15	7	4	10	7	13	6	4	9	6
	90.0	16	11	7	15	11	13	6	4	9	6	13	6	4	9	6
	120.0	16	8	5	11	8	13	6	4	9	6	13	6	4	9	6

ANCHOR NOTES:

See Sheet 7 for Anchor Notes.

eyewall Armor™ HURRICANE PROTECTION

J.W. KNEZEVICH LICENSE NO. 41961 STATE OF FLORIDA PROFESSIONAL ENGINEER

07/30/2026

KNEZEVICH CONSULTING

KNEZEVICH CONSULTING, LLC
1600 S. Federal Hwy., Suite 961
Pompano Beach, FL 33062
T 954.772.6224 COA 27988
www.knezevich.com

Copyright © 2026 Knezevich Consulting, LLC

.050 & .0615 ALUMINUM STORM PANEL

Client / Manufacturer:

ABC Supply / Outdoor Solutions™

A DIVISION OF ABC SUPPLY CO., INC.
400 West McNab Road
Fort Lauderdale, FL 33309
phone: 954-970-9999
fax: 954-970-9988

Revisions

no	date	by	description
0	07/30/2026	JWK	FBC 2026 Update; formerly KC23-0710

Scale: AS NOTED

Drawn by: JWK

Date: 07/30/26

J.W. Knezevich
Professional Engineer
FL License No.: PE 41961

This item has been digitally signed and sealed by John W. Knezevich, PE on the date adjacent to the seal.

Signature must be verified on any electronic copies.

Drawing No.

KC26-0713